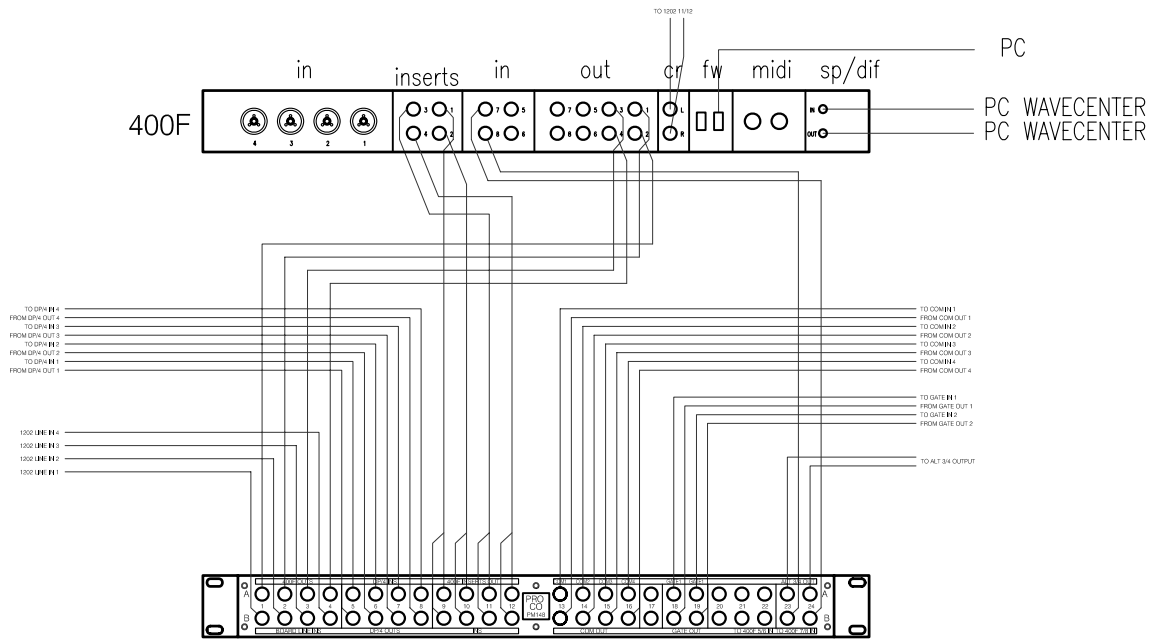
TO 1202 11/12
PC
in
inserts
in
out
cr
fw
midi
sp/dif
400F
PC WAVECENTER
PC WAVECENTER
TO DPX4 IN 4
FROM DPX4 OUT 4
TO DPX4 IN 3
FROM DPX4 OUT 3
TO DPX4 IN 2
FROM DPX4 OUT 2
TO DPX4 IN 1
FROM DPX4 OUT 1
1202 LINE IN 4
1202 LINE IN 3
1202 LINE IN 2
1202 LINE IN 1
TO COM IN 1
FROM COM OUT 1
TO COM IN 2
FROM COM OUT 2
TO COM IN 3
FROM COM OUT 3
TO COM IN 4
FROM COM OUT 4
TO GATE IN 1
FROM GATE OUT 1
TO GATE IN 2
FROM GATE OUT 2
TO ALT 3/4 OUTPUT
PRO CO PANEL

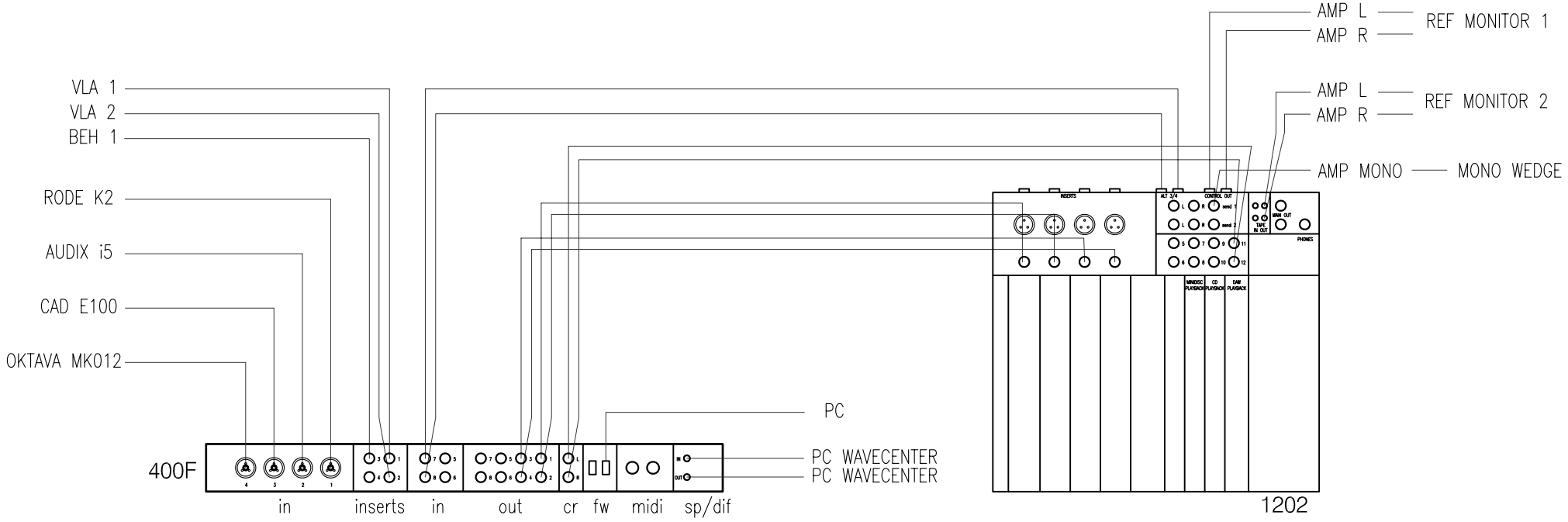
AMP L
AMP R
REF MONITOR 1
AMP L
AMP R
REF MONITOR 2
AMP MONO
MONO WEDGE
VLA 1
VLA 2
BEH 1
RODE K2
AUDIX i5
CAD E100
OKTAVA MK012
PC
400F
PC WAVECENTER
PC WAVECENTER
in
inserts
in
out
cr
fw
midi
sp/dif
1202
INSERTS
ALT 3/4
CONTROL OUT
TAPE IN OUT
MAIN OUT
PHONES
MINIDISC PLAYBACK
CD PLAYBACK
DAT PLAYBACK